NO.	REV	SHT.
10-933080Z		

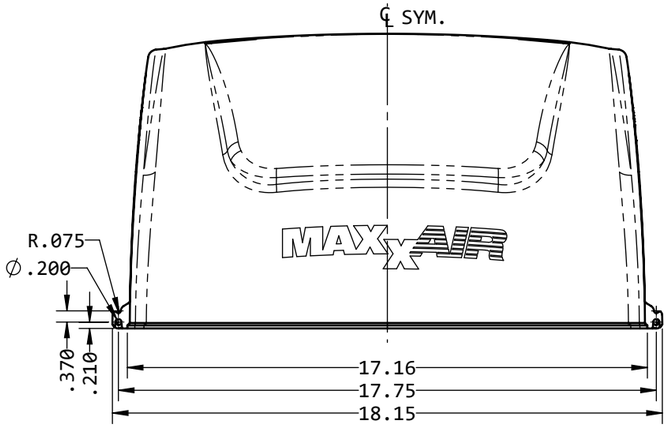

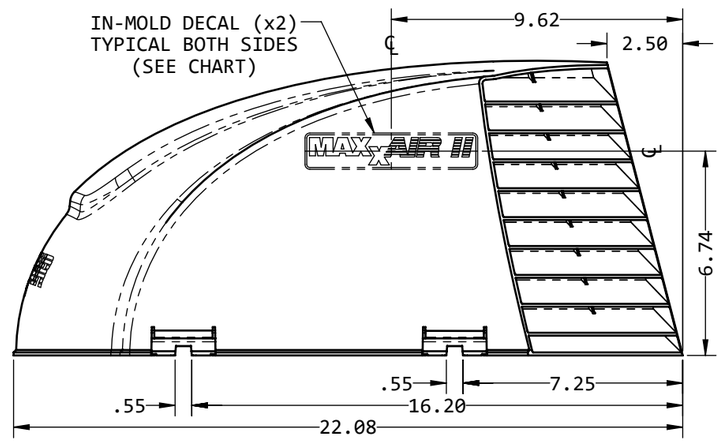

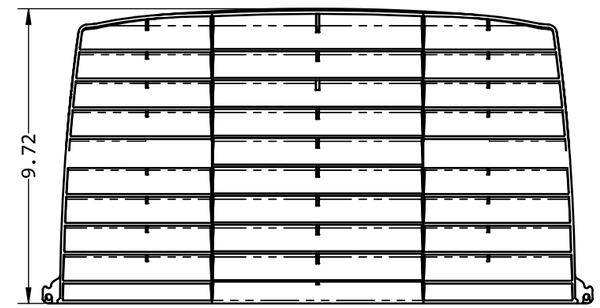

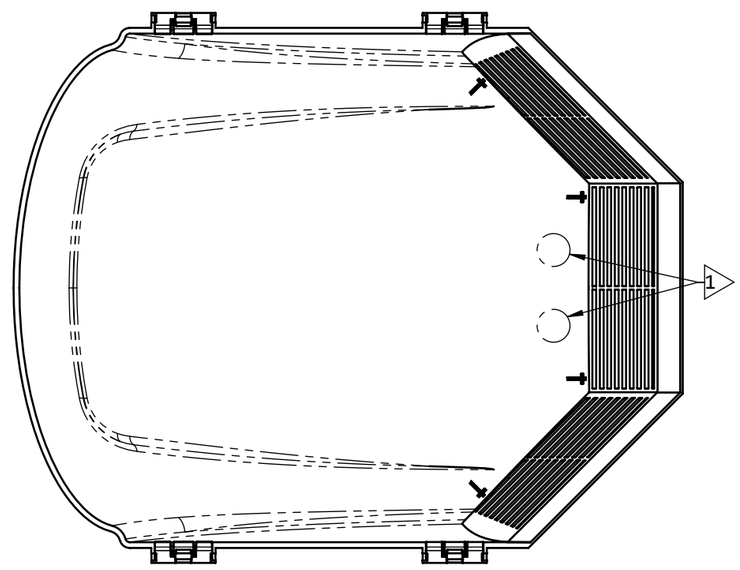

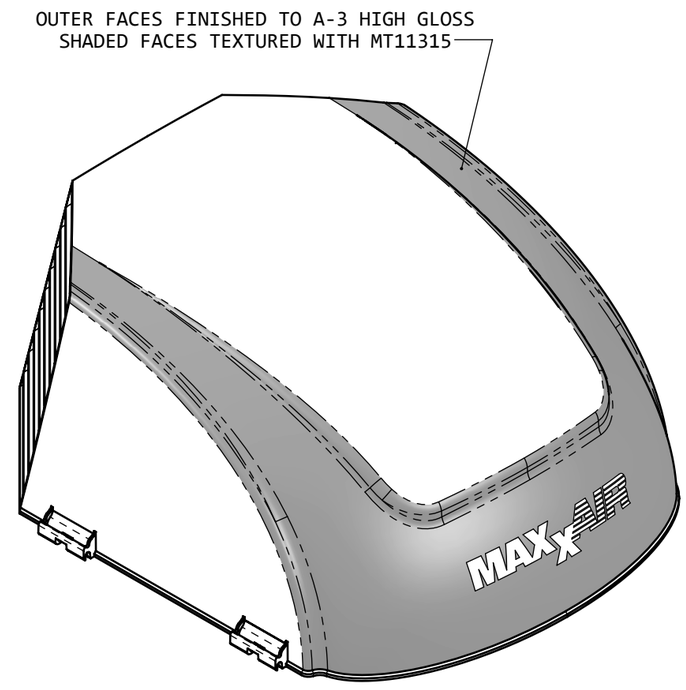

NOTES:
PRINT SHOWS GENERAL DIMENSIONS ONLY.
SOLID MODEL FILE GOVERNS DETAILS OF PART.
NOMINAL WALL THICKNESS: 0.110
CLASS II COSMETICS (PER RVPS 410-001).

1 DATE WHEEL INDICATOR (MONTH & YEAR) AND
RECYCLE WHEEL INDICATOR (#2HDPE & #7OTHER)

2 DIMENSIONS OF SMOKE MODEL MAY BE UP TO 1.7% LARGER
DUE TO SHRINK FACTOR DIFFERENCE.

PART NUMBER	10-933081Z (TRANSLUCENT WHITE)	10-933082Z (BLACK)	10-933083Z (SMOKE) 2
MATERIAL	HDPE, NATURAL 20 MELT INEOS J50-2000, NOVA 2710, MARLEX 9018 OR GENERIC PRIME EQUIVALENT W/ #9034556C INTERACT UV/AO		KOSTRATE EDGE UTUS93 Ⓑ W/ UVI & TINT PACKAGE
COLOR	NATURAL	STANDRIDGE #SCC43507 @ 5%	SUPPLIED IN MATERIAL FROM PSG
DECAL (x2)	10A21254Z	10A20118Z	10A20118Z

REF. DWG.

TOLERANCES (NON-CUMULATIVE)
.X ± .1
.XX ± .03
.XXX ± .005
ANGULAR ± 3°
HOLES ± .003 DIA.
FRACTIONAL ± 1/32

UNLESS OTHERWISE SPECIFIED
A DIM. TO TANGENT POINT
B DIM. TO INSIDE MOLD LINE
C DIM. TO OUTSIDE MOLD LINE
F FLUSH WITHIN
S SPOTWELD
BEND RADIUS:

PROJECTION - ALL DIMENSIONS IN INCHES - DO NOT SCALE PRINT

MATERIAL: SEE CHART
FINISH SPEC.: SEE NOTE

RV PRODUCTS — DIVISION OF
AIRXCEL INCORPORATED
WICHITA, KANSAS

SCALE	DATE	DRAWN	APPROVED
NONE	7-16-'20	AL	J.W.

CHECKED
COMPOSITE

NAME: MAXXAIR II+ VENT COVER
NO.: 10-933080Z
REV

NO.	REV	SHT.
10-933080Z		

LTR	DATE	BY	CHKD	DRAWING CHANGES
	7-16-20	AL	AL	NEW
A	9/16/21	AH	AL	CHANGED WHITE TO TRANSLUCENT WHITE
B	11-30-21	AL	AL	CORRECTED KOSTRATE MATERIAL DESIGNATION - UTUS93 WAS TTUS93

ECO 2481 RM D.L.